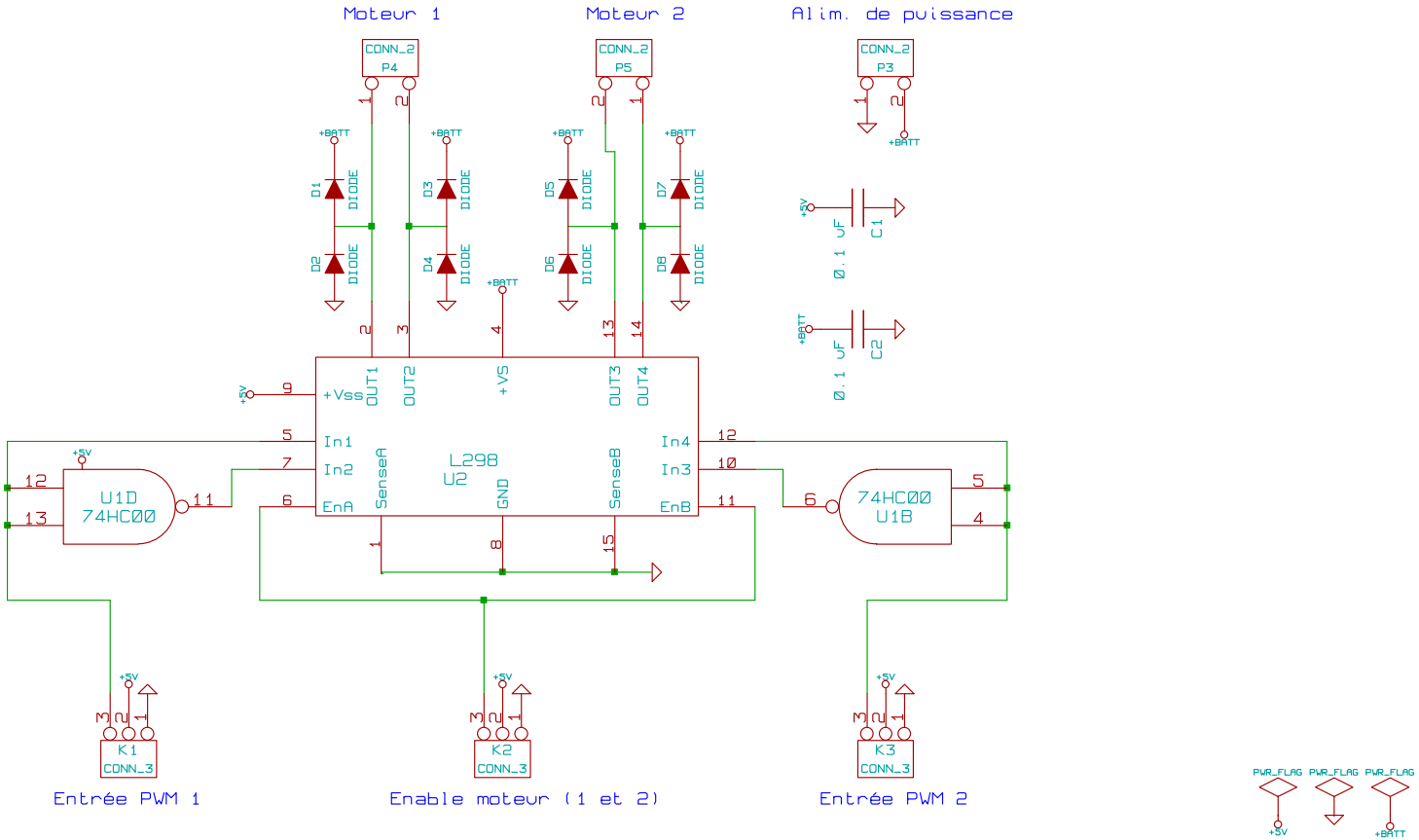

File: distribuer.sch		
Sheet: /		
Title:		
Size: A4	Date: 23 mar 2009	Rev:
KiCad E.D.A. EESchema (20080825c)		Id: 1/1